Common Emitter / Collector Amplifier - v8.2 - Assembly Sheet

Circuit ..... :

Vers. / Date :

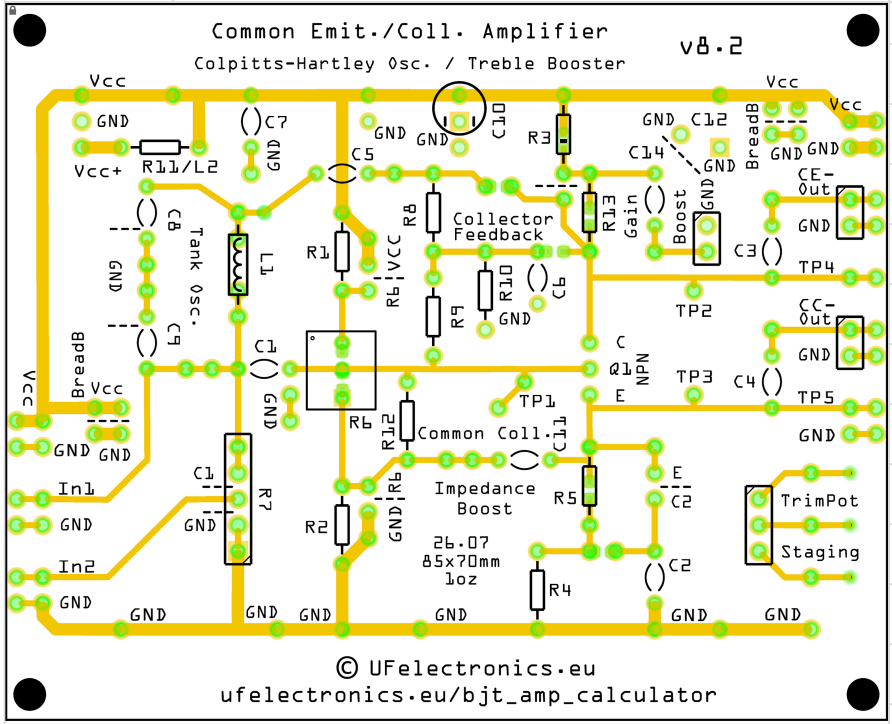

Notes

Vcc:

Resistors	Value	Capacitors	Value
R1		C1	
R2		C2	
R3		C3	
R4		C4	
R5		C5	
R6		C6	
R7		C7	
R8		C8	
R9		C9	
R10		C10	
R11/L2		C11	
R12		C12	
R12		C13	
R13		C14	

Other			
L1		Q1	
L2/R11			